PowerTools Pro Application Note

PTAN #2, rev.1, 3/30/2009

Applicable Products: Epsilon EP-P, FM4E, SM EZMotion, Digitax ST-Z

Virtual Master
Setup & Use

Control Techniques Americas
12005 Technology Drive, Eden Prairie, MN 55344
Phone: 800-893-2321
Fax: 952-995-8020

Introduction

Many machines use a master axis or master encoder that provides a common clock signal used to synchronize the follower axes. However using a master encoder introduces some imperfections in the synchronization (clock) signal. Any imperfections in the line speed (speed variation or vibration) that drives the master encoder will be passed on to the following drives. Also many machines do not have a master line encoder, but could greatly benefit from a common synchronization source.

The Virtual Master solves both of these problems, by producing a perfect, electronically produced clock signal for all follower axes to follow.

PowerTools Pro provide this ability in an easy to setup Virtual Master.

Setting up a system involves

1. Setup the drive that contains the Virtual master
2. Setup the drive that contains the Virtual master, but will also act as a follower to the VM
3. Setup a follower axis that will receive the VM signal
4. Cabling the Sync out signal to the Sync input(s)

This application note describes the procedure for setting up the VM in the drive producing the VM and also using the sync input signal from a master on the follower drive.

Control Techniques Americas
12005 Technology Drive, Eden Prairie, MN 55344
Phone: 800-893-2321
Fax: 952-995-8020

Hardware overview

Let's first review the hardware encoder ports on the drive families. To use VM the master EP-P drive must have a hardware revision A8 or greater, FPGA revision 101 or higher.

Epsilon EP-P Sync Encoder Output Port

Master Axis

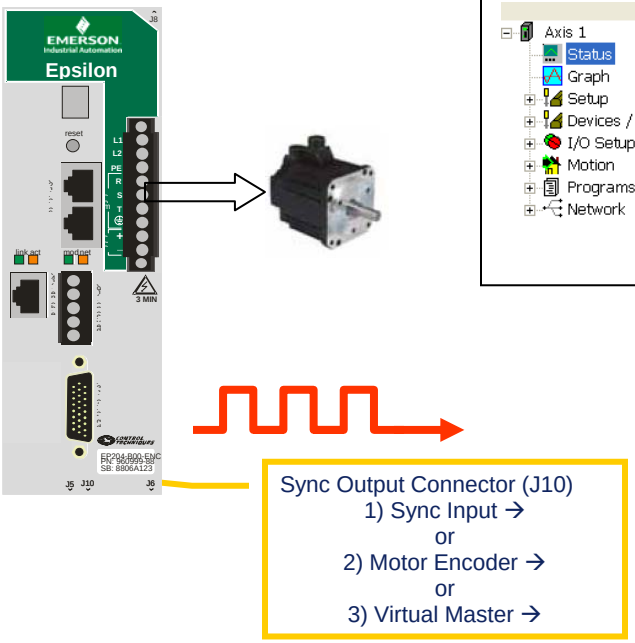

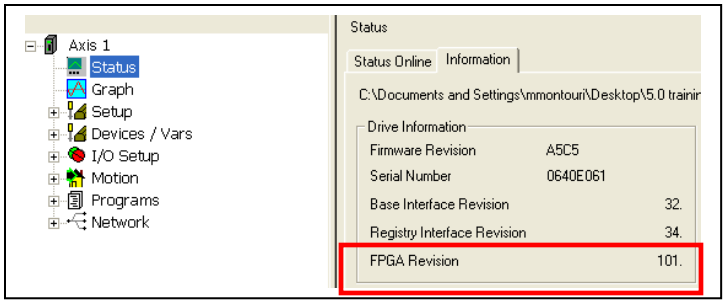

The Sync Output connector (J10) is configured in PowerTools with one of these three options: 1) to pass through the Sync Input signal, 2) pass the motor's encoder signal or 3) send the internally generated Virtual Master signal (this requires hardware version A8 or higher, FPGA revision 101 or higher).

Control Techniques Americas
12005 Technology Drive, Eden Prairie, MN 55344
Phone: 800-893-2321
Fax: 952-995-8020

Epsilon EP-P Sync Encoder Input and Output Port

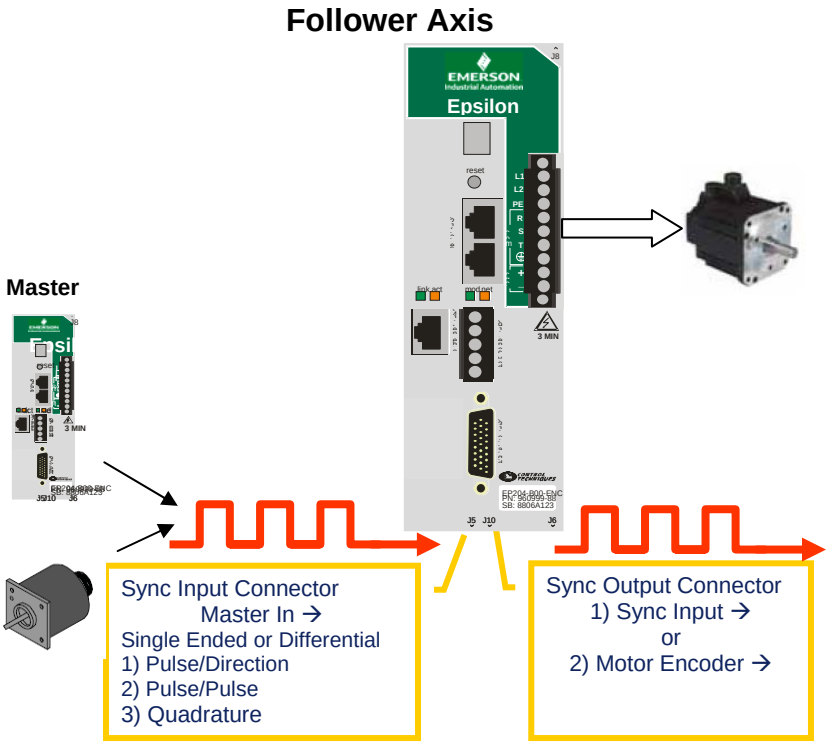

The follower axis can receive an encoder input signal on its secondary encoder input port (Sync Input) (J5). The follower axis receives this signal from any upstream source, but has no knowledge of what this source is.

The Sync Input signal can be Single or Differential type and can decoder the signal as: Pulse/Direction, Pulse/Pulse or Quadrature. See the Master view within PowerTools for selecting the signal type. For EP Drive to EP Drive following, the signal type is always Differential, Quadrature.

The follower can also send one of two signals out its Encoder Output port, just like the master axis. The Sync Output connector (J10) is configured in PowerTools with one of two options: 1) pass through the Sync Input signal, 2) send the motor's encoder signal. (Although any individual drive has the ability to become a VM and send this VM signal out this port, we are calling this drive a 'follower' and therefore the VM output signal is not a valid selection).

Generally passing the motor's encoder out this port is not recommended, since motor's following error and velocity ripple will then be replicated to the downstream drive(s).

Control Techniques Americas
12005 Technology Drive, Eden Prairie, MN 55344
Phone: 800-893-2321
Fax: 952-995-8020

Hardware overview

Unidrive SP w/ SM EZMotion & SM Encoder Plus

Digitax ST-Z w/ SM Encoder Plus

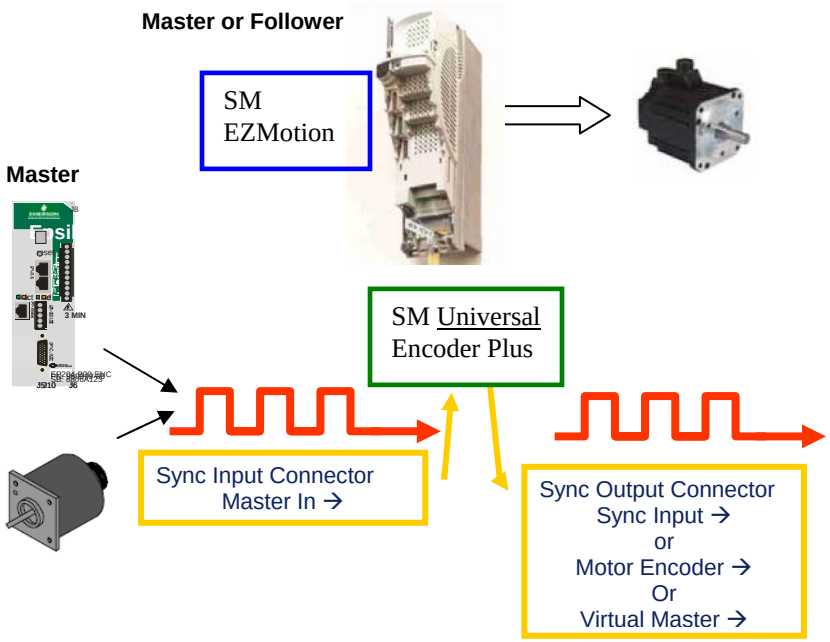

Unidrive SP
Unlike the built-in encoder input and output ports on the Epsilon EP, the Unidrive SP uses add-on Solution Modules to add capabilities to the base drive.

An SM Universal Encoder Plus module is used to provide a secondary encoder input and an encoder output port.

The SM EZMotion module, a motion controller co-processor, and PowerTools Pro software allow easy setup of the Virtual Master. The VM is then redirected out the SM Universal Encoder Plus output port in the same manner as described in the

Digitax ST-Z
For the purposes of this application note, the Digitax ST-Z can be considered just like a Unidrive SP with an SM EZMotion module. An SM Encoder Plus would need to be added to the drive to add master encoder input and output capability.

Control Techniques Americas
12005 Technology Drive, Eden Prairie, MN 55344
Phone: 800-893-2321
Fax: 952-995-8020

Virtual Master Setup

Navigate to the Virtual Master view.
Check the Enable Virtual Master checkbox to enable the VM feature. Do not enable the VM is you do not plan on using it, as this will consume CPU resources. Only the Master axis needs the VM enabled!

Enter in the Distance, Velocity, Acceleration, Deceleration values. This will create a trapezoidal or triangular type motion profile that the VM will execute. The pulse train generated from a VM index will be exactly the same a master encoder being accelerated, traveling for a distance and decelerating to a stop.

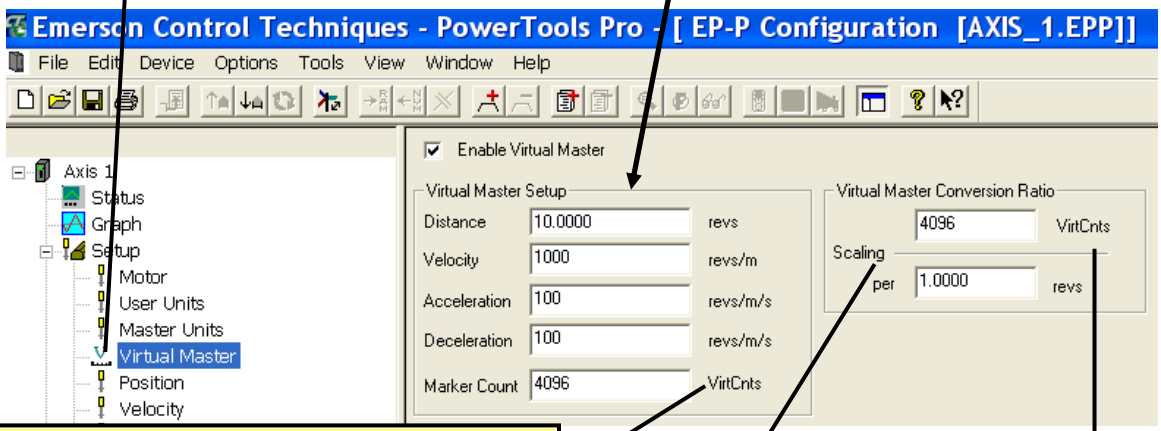

If your system needs a "once per revolution" marker pulse, the Marker Count parameter can be filled in with the "revolution" distance in Virtual Master Counts (VirtCnts)

You can change VM units to user units here, by entering the appropriate ratio. The 'revs' text is the User Unit's term. Setting up 'inches' as the User Units would display the word 'inches' here. The number of decimal places is controlled by the User Units decimal value.

Use the highest scaling possible for the best performance. However the VM output frequency is hardware limited to 5 MHz, therefore do not set the Velocity * Scaling higher than 5 MHz

Control Techniques Americas
12005 Technology Drive, Eden Prairie, MN 55344
Phone: 800-893-2321
Fax: 952-995-8020

Virtual Master Setup, cont

Setting the scaling on the VM is relatively easy; however there are values that allow the VM pulse train to work better than others. There is also a maximum limitation to the VM frequency pulse train of 5 Mhz [VirtCnts/Sec].

While 5Mhz is the hardware maximum, the cable connecting the VM to the follower drive(s) is the determining factor in how high the user should set the maximum frequency. Electrical noise issues must be taken into account when operating at high frequencies.

One condition is setting up the Velocity and Scaling values so that an integer number of VM pulses (or Virtual Counts [VC]) are produced every servo scan. Setting up for an integer number allows the system to operate with no jitter on the pulse train.

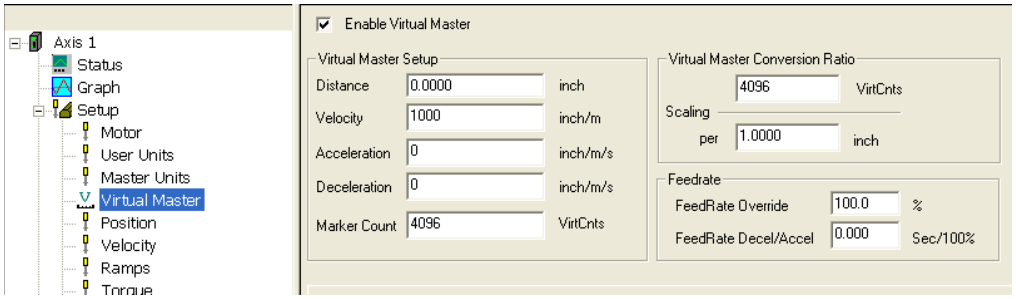

For example to calculate the VC per servo scan in the above screen shot:
Velocity * Scaling / 60 * Servo update rate:
1000 [inch/min] * [4096 VC/inch] / 60[sec/min] *0.0016 [s] = 109.2266666 VC / servo scan. The fractional part of this number will cause jitter in the VM pulse train.

Now let's calculate the same value with a different scaling:

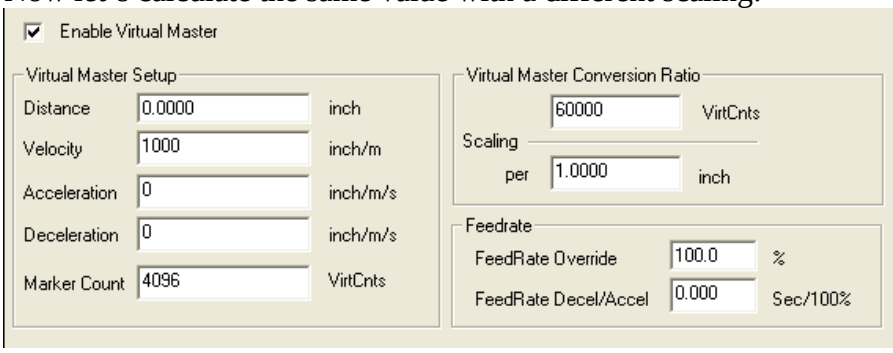

1000 [inch/min] * [60000 VC/inch] / 60[sec/min] *0.0016 [s] = 1600 VC per servo scan. Maximum pulse train frequency = 1600 [VC/scan] / .0016 [sec/scan] = 1,000,000 Hz [VC/sec], which is under the maximum allowed value.

Control Techniques Americas
12005 Technology Drive, Eden Prairie, MN 55344
Phone: 800-893-2321
Fax: 952-995-8020

Setting the Master Source: EP-P, FM4E

The axis must be setup properly to respond to the master signal; these configuration values are found in the Master Units view.

The Master Units view's Master Source drop down box has four selections:

1. **None** – this is the default selection, no master following is used.
2. **Custom Variable** – The drive can follow a master signal from a source other than the master encoder input. See the Alternate Master Application note for details.
3. **Sync Encoder Input** – For following the signal coming into the drive's sync encoder input connector. This is the typical setting when setting up a follower. An SNCDD-915-xxx cable can be used to cable the master drive's output signal from the encoder output connector to the follower drive's encoder input connector (EPP drive family).
4. **Virtual Master** – This selection is used to setup a Master drive to follow its own internal Virtual Master. A drive that produces the VM can follow its own internal VM without wiring its encoder output port to its own encoder input port.

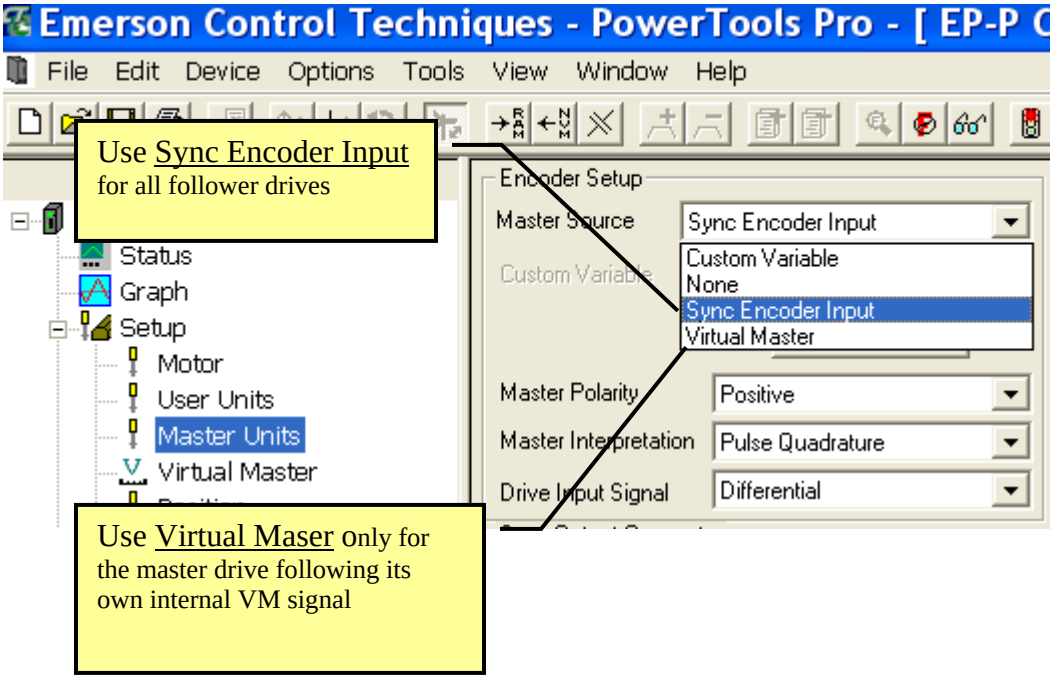

Control Techniques Americas
12005 Technology Drive, Eden Prairie, MN 55344
Phone: 800-893-2321
Fax: 952-995-8020

Setting the Master Source: SM EZMotion, Digitax Z

The axis must be setup properly to respond to the master signal; these configuration values are found in the Master Units view.

The Master Units view's Master Source drop down box has seven selections:

1. **Drive** – select this if the SP/Digitax drive's encoder input is connected to the master source
2. **None** – this is the default selection, no master following is used.
3. **Slot 1,2,3** – select the value that corresponds to the slot location that the SM Universal Plus encoder module is in. The master source should then be connected to the SM Universal Plus encoder input port. See example Arrow below
4. **User Defined Drive Parameter** – This setting is for using an Alternate Master and is not covered by this application note.
5. **User Defined Module Parameter**– This setting is for using an Alternate Master and is not covered by this application note.
6. **Virtual Master** – This selection is used to setup a Master drive to follow its own internal Virtual Master. A drive that produces the VM can follow its own internal VM without wiring its encoder output port to its own encoder input port.

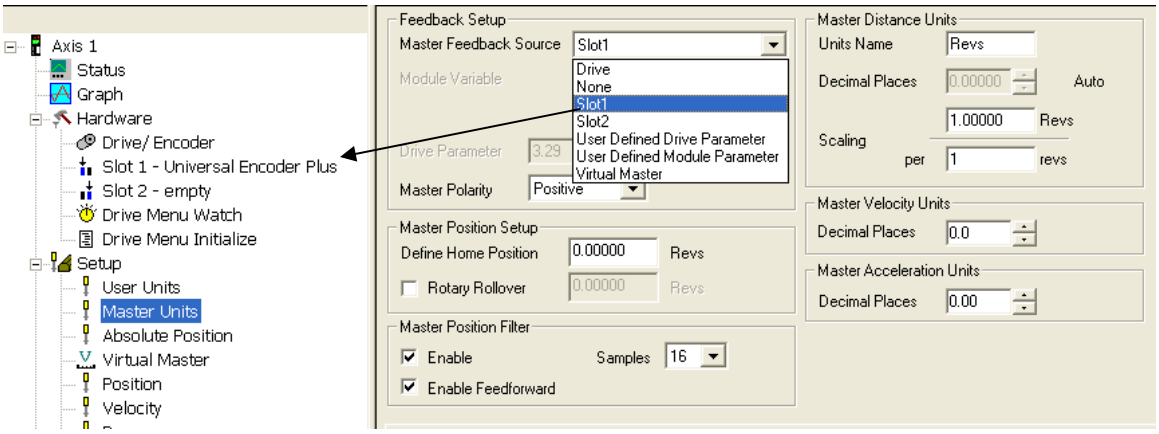

Control Techniques Americas
12005 Technology Drive, Eden Prairie, MN 55344
Phone: 800-893-2321
Fax: 952-995-8020

Once a Master Source is selected, the other selections on the view will be enabled.

Populate the Master Polarity, Master Interpretation, and Drive Input Signal appropriate for your system's hardware. The EP drive's encoder output port and SM Universal Encoder Plus output will produce a Differential Pulse Quadrature signal, so all followers would use that setting. Master Polarity (direction) will be application dependent.

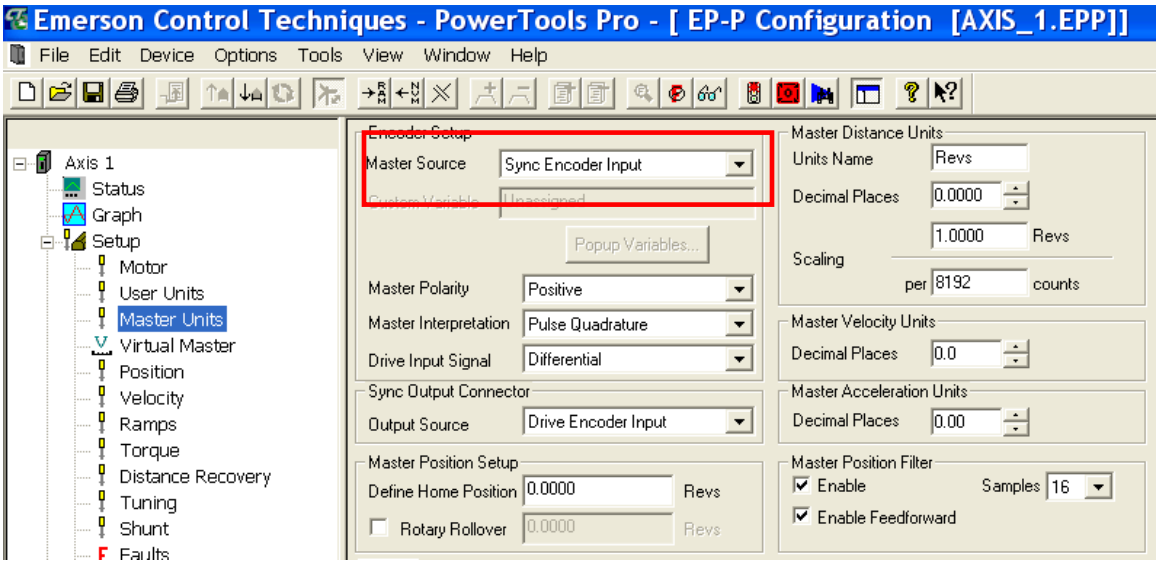

To pass the sync signal out the drive the Sync Output Connector must be configured to send the appropriate signal.

Control Techniques Americas
12005 Technology Drive, Eden Prairie, MN 55344
Phone: 800-893-2321
Fax: 952-995-8020

Sync Output Configuration: EP-P, FM4E

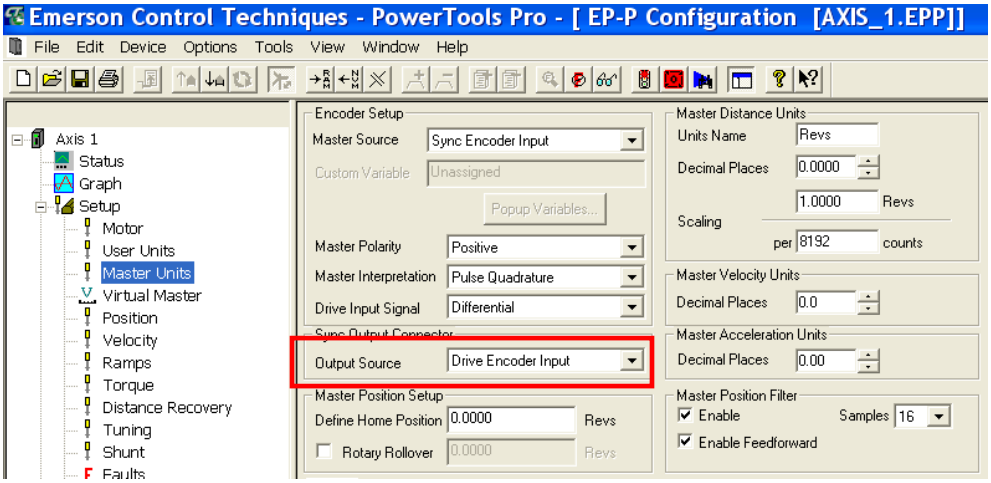

The Sync Output Connector is configurable as to what signal the drive will produce on the port. Selections are:

1. **Drive Encoder Input** – routes the Sync Encoder Input port directly to the encoder output port.
2. **Motor Encoder** – routes the motor's encoder directly to the encoder output port. The motor encoder should only be used as the 'master' as a last resort. Motor following error and jitter will result in a poor master signal.
3. **Virtual Master** – routes the Virtual Master signal to the encoder output port.

The Master drive producing the VM will set this to Virtual Master.
The follower drive(s) will set this to Drive Encoder Input to pass the Encoder input directly to the encoder output.

Control Techniques Americas
12005 Technology Drive, Eden Prairie, MN 55344
Phone: 800-893-2321
Fax: 952-995-8020

Sync Output Configuration: SM Universal Encoder Plus

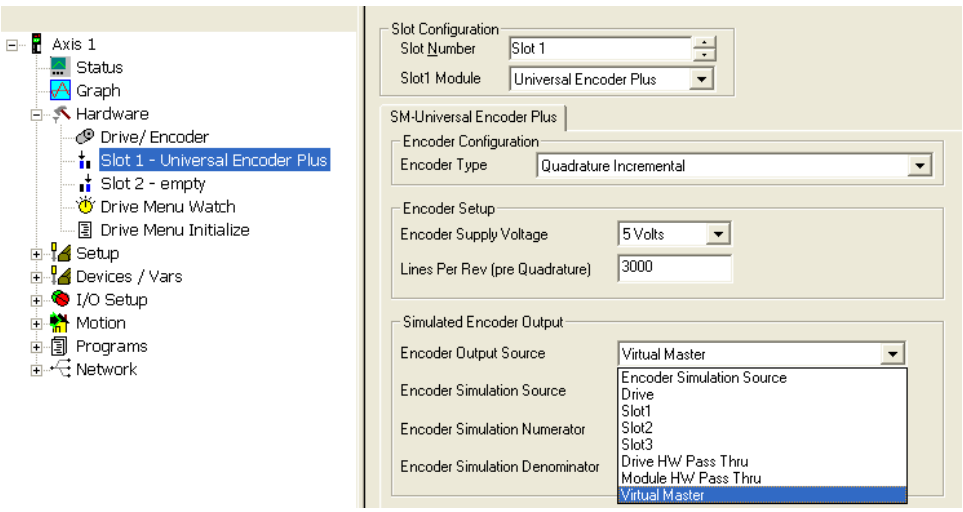

The Sync Output port on the SM Universal Encoder Plus module is configurable as to what signal the drive will produce on the port. Selections are:

1. **Drive** – routes the drive's encoder input port to the module's encoder output port. This setting allows a scaling factor to be applied to the output signal.
2. **Slot 1,2 or 3** – routes the slot's module encoder input to the encoder output
3. **Drive HW Pass Thru** – routes the drive's encoder input port directly to the module's encoder output port. No scaling is possible with this selection
4. **Module HW Pass Thru** – routes the module's encoder input port directly to the module's encoder output port. No scaling is possible with this selection
5. **Virtual Master** – routes the Virtual Master signal to the encoder output port.

The Master drive producing the VM will set this to Virtual Master
The follower drive(s) will set this to Module HW Pass Thru assuming the virtual master is coming into the follower drive via the SM Universal Encoder's input.

Control Techniques Americas
12005 Technology Drive, Eden Prairie, MN 55344
Phone: 800-893-2321
Fax: 952-995-8020

For example:
The ‘system’ below would use the following settings to pass the first drive’s virtual master signal through to the three follower drives

Axis	Master	Follower	Follower	Follower
Master Source	Virtual Master	Sync Encoder Input	Sync Encoder Input	Sync Encoder Input
Sync Output Connector	Virtual Master	Drive Encoder Input	Drive Encoder Input	Not used - doesn’t matter

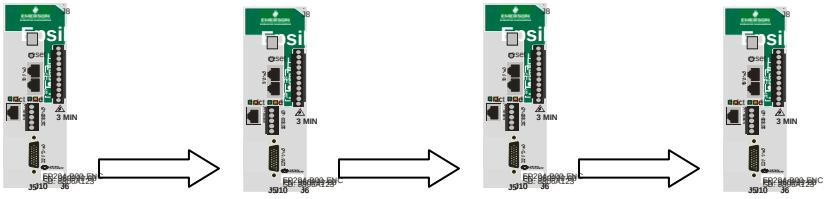

Control Techniques Americas
12005 Technology Drive, Eden Prairie, MN 55344
Phone: 800-893-2321
Fax: 952-995-8020

Following a Virtual Master

This involves setting both the Virtual Master view's Conversion Ratio and setting the Master Units view's Master Scaling. The scaling needs to be set to the same ratio in both places as shown here for the follower and master drive to have the same unit scaling. This also applies the drive following its own VM.

Master Units view

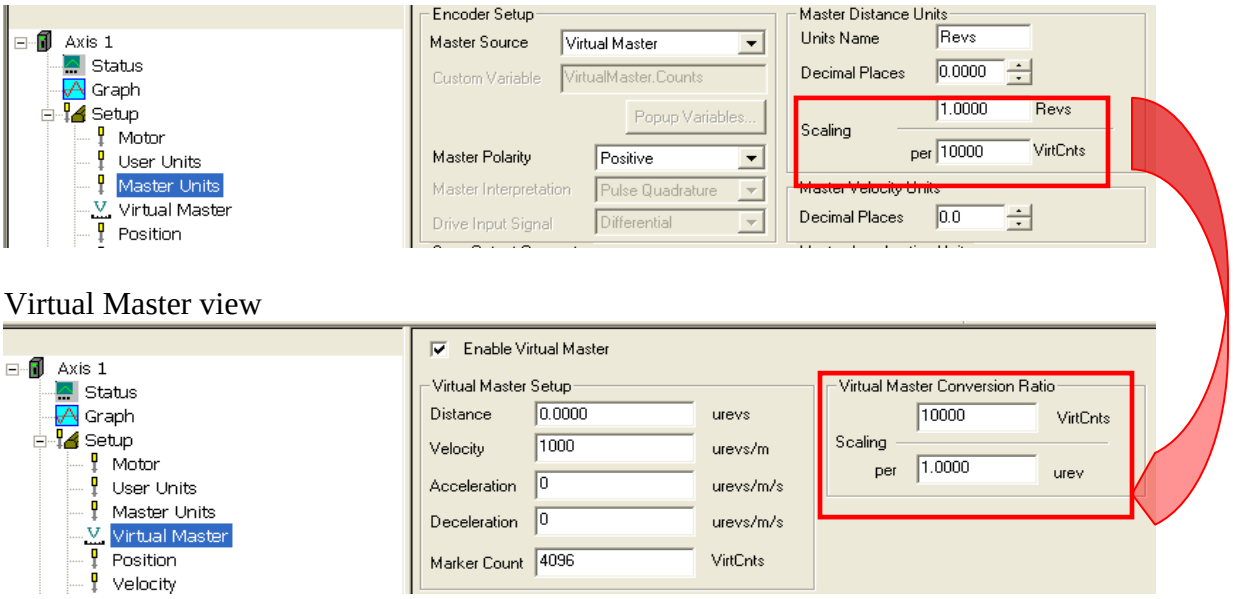

Virtual Master view

Control Techniques Americas
12005 Technology Drive, Eden Prairie, MN 55344
Phone: 800-893-2321
Fax: 952-995-8020

Controlling the Virtual Master

The VM can be initiated like an index (VirtualMaser.Intiate) or activated like a jog (VirtualMaster.PlusActivate and VirtualMaster.MinusActivate) within the assignments view.
Simply drag a Source to a Destination or vice versa to assign the VM functions.

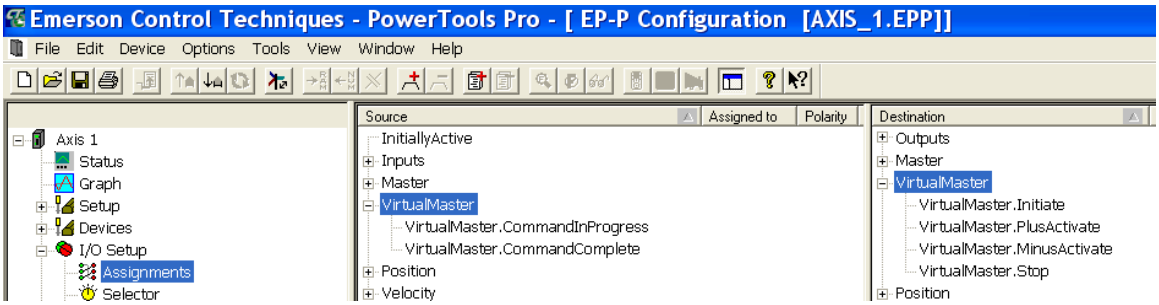

The VM index (VirtualMaser.Intiate) is edge sensitive, a signal changing from a low to high state will initiate the VM. Once initiated, the VM pulse train will continue until the VM distance is reached or a VirtualMaster.Stop is activated.

The VM jog (VirtualMaster.PlusActivate and VirtualMaster.MinusActivate) is level sensitive, so the level must be maintained in order for the VM pulse train to continue.

Control Techniques Americas
12005 Technology Drive, Eden Prairie, MN 55344
Phone: 800-893-2321
Fax: 952-995-8020

The VM can also be controlled from a user program by accessing the variable tree as shown here. Drag and Drop the appropriate command from the variable tree into the user program view.

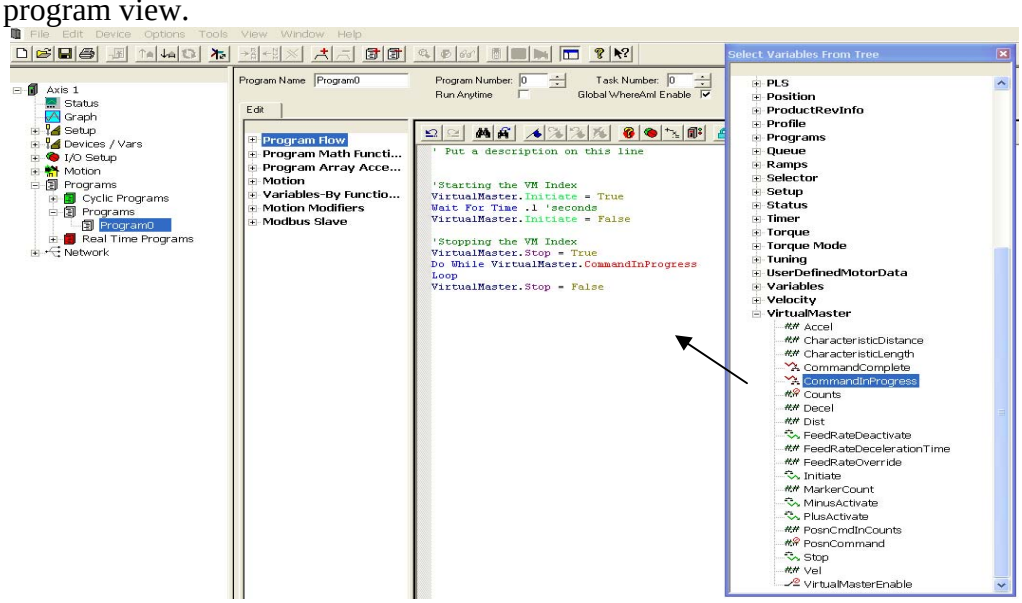

The Virtual Master pulse train (whether in Index or Jog mode) is unaffected by the status of the master drive. The VM pulse train will not stop unless commanded to do so by the user program or an assignment.

Assigning the VirutalMaster.Stop to the DriveEnableStatus state with Active Off polarity is a simple way to stop the VM without having to write a user program to perform the task

VM FeedRate Override
The VM also has a FeedRate Override setting that allows the VM to be paused and resumed. The FeedRate Override also allows the pulse train frequency to be lowered allowing all following axes to lower their respective speeds.

Do not use the normal FeedRate Override (found under Velocity in the Variable Tree) to slow down or pause the axes running under a VM. This will cause axes to become out of sync with each other due to the differences in drive settings.

Control Techniques Americas
12005 Technology Drive, Eden Prairie, MN 55344
Phone: 800-893-2321
Fax: 952-995-8020

VM Online

When online with the drive, use the Online tab to control the VM with these buttons:

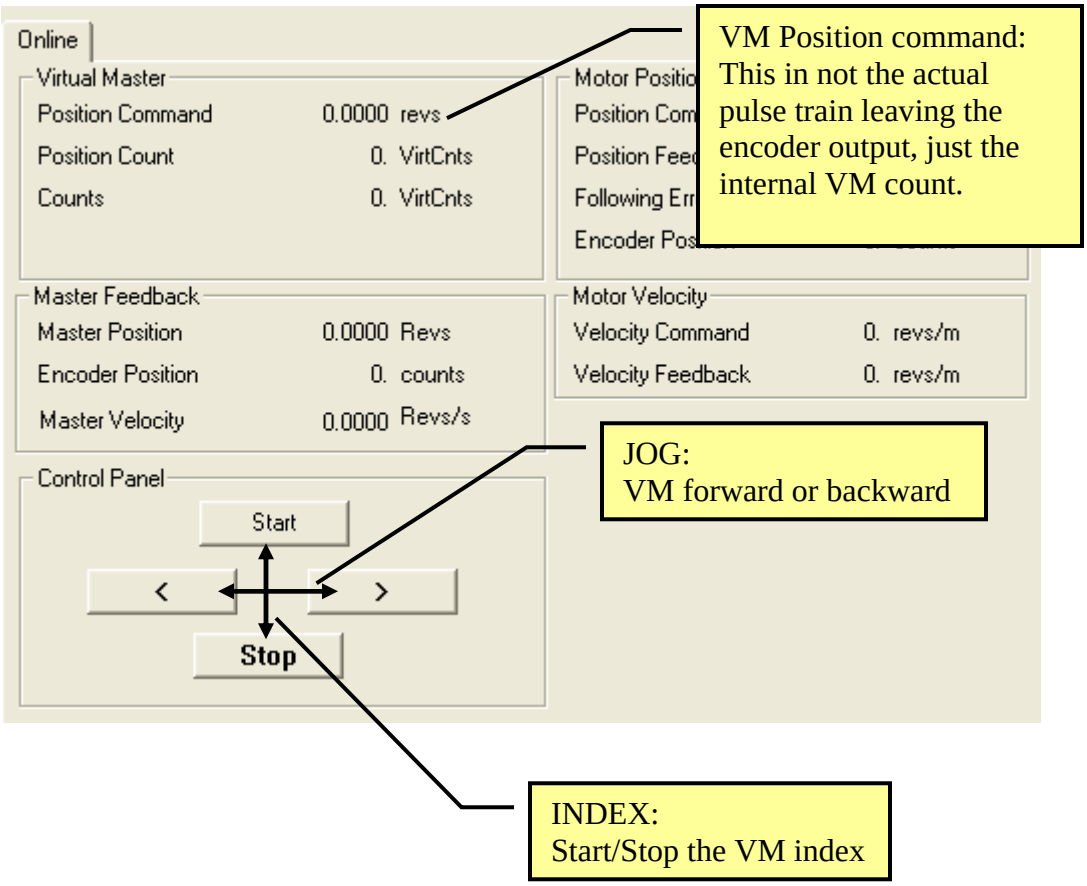

Control Techniques Americas
12005 Technology Drive, Eden Prairie, MN 55344
Phone: 800-893-2321
Fax: 952-995-8020